mm [inch]

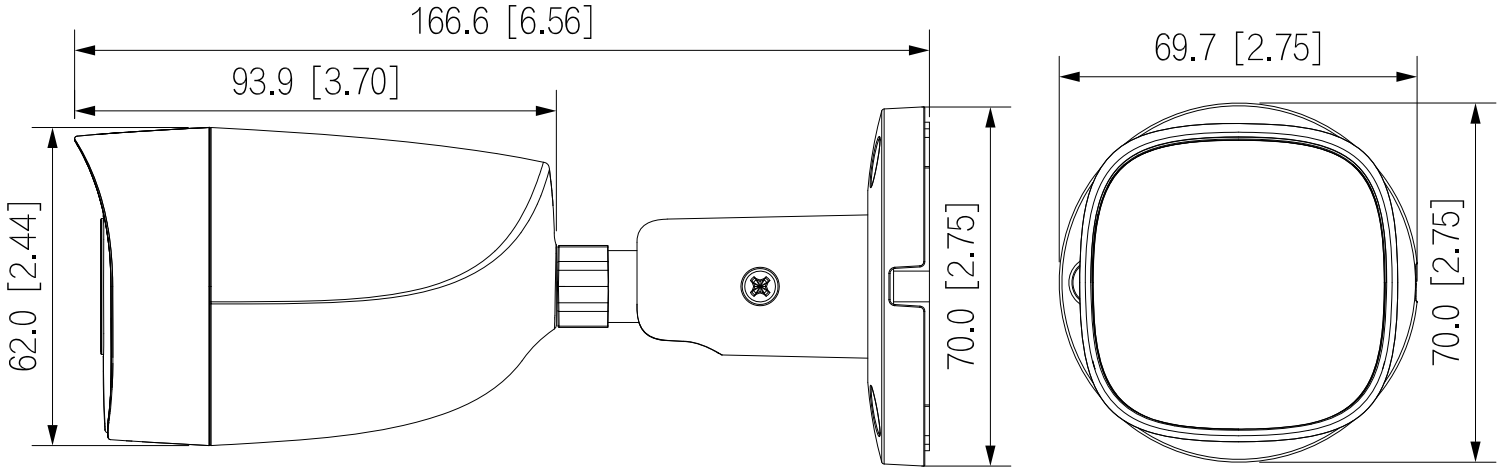
166.6 [6.56]
93.9 [3.70]
62.0 [2.44]
70.0 [2.75]
69.7 [2.75]
70.0 [2.75]

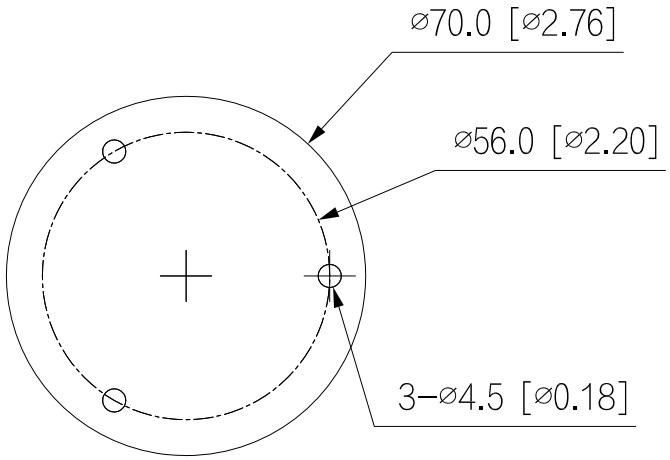
⌀70.0 [⌀2.76]
⌀56.0 [⌀2.20]
3-⌀4.5 [⌀0.18]