| PART NO | REV | SYMBOL | DESCRIPTION | LOCATION | REASON | SIGN | DATE |
|---|---|---|---|---|---|---|---|
| | 0 | / | FIRST RELEASE | | / | CHANGCHANG | 2020-05-08 |

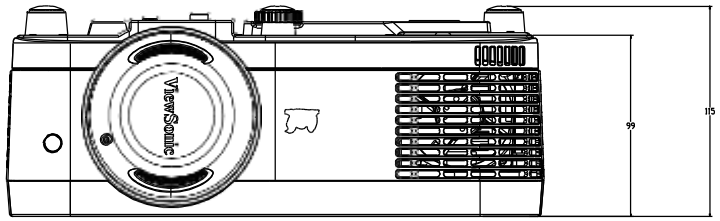


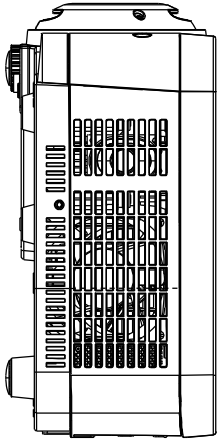

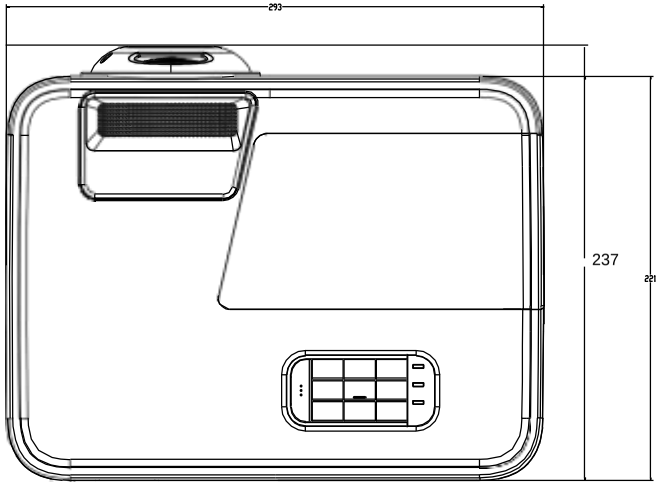


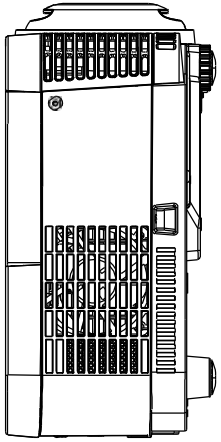

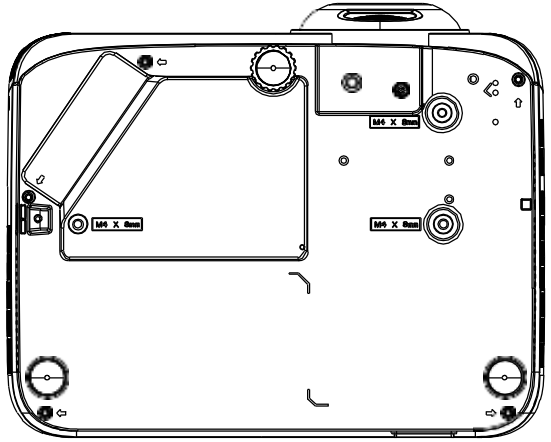


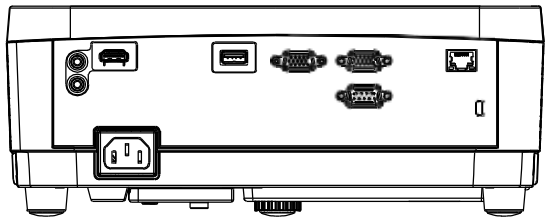

| | | | | | | | | |
|---|---|---|---|---|---|---|---|---|
| MODEL | VS20579 | NAME | 0000_ASSY_SYSTEM_EAGLE-LCD | | | | | |
| DRN | CHANGCHANG | 2020-05-05 | MATERIAL | SEE NOTE | | | | |
| DSN | CHANGCHANG | 2020-05-05 | FINISH | SEE NOTE | | | | |
| CKD | ERIC HUANG | 2020-05-05 | SCALE | 1/1 | DIM IN | mm | | |
| APPD | CHANGCHANG | 2020-05-05 | SHEET | 1 OF 1 | CAVITIES | 1 | | |
| Qisda Corporation | | | | | | | | |

TOLERANCE UNLESS OTHERWISE SPECIFIED (±)

| CLASS | A | B | C | D | E | F | G |
|---|---|---|---|---|---|---|---|
| < 8mm | ±0.05 | ±0.1 | ±0.2 | ±0.3 | ±0.5 | ±1 | ±2 |
| 8 - 25mm | ±0.08 | ±0.15 | ±0.3 | ±0.5 | ±0.8 | ±1.5 | ±3 |
| 25 - 80mm | ±0.12 | ±0.2 | ±0.4 | ±0.8 | ±1 | ±2 | ±4 |
| 80 - 250mm | ±0.15 | ±0.3 | ±0.5 | ±1 | ±1.5 | ±3 | ±5 |
| 250 - 800mm | ±0.2 | ±0.4 | ±0.8 | ±1.5 | ±2 | ±4 | ±8 |
| > 800mm | ±0.3 | ±0.5 | ±1 | ±2 | ±3 | ±5 | ±10 |

FILE NAME: 0000_LCDSYSTEM_EAGLE_DRAWING

DRAWING NO: