Lift :130±5mm

Swivel:± 20°(±2°)

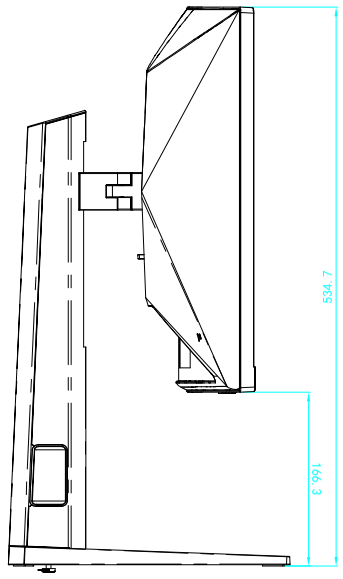

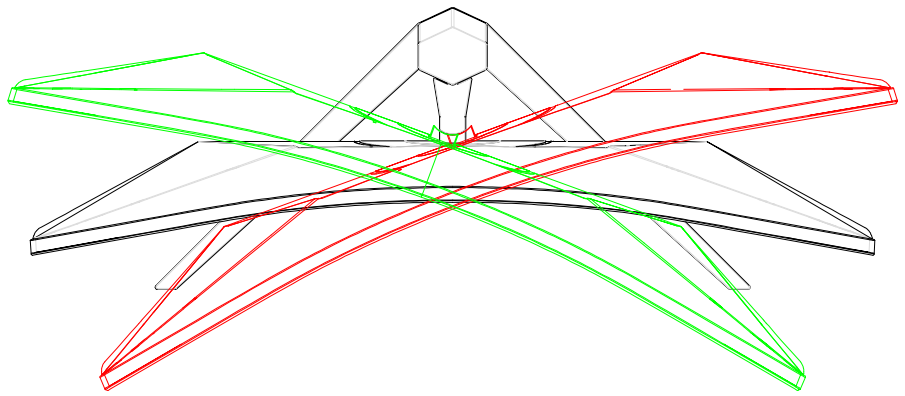

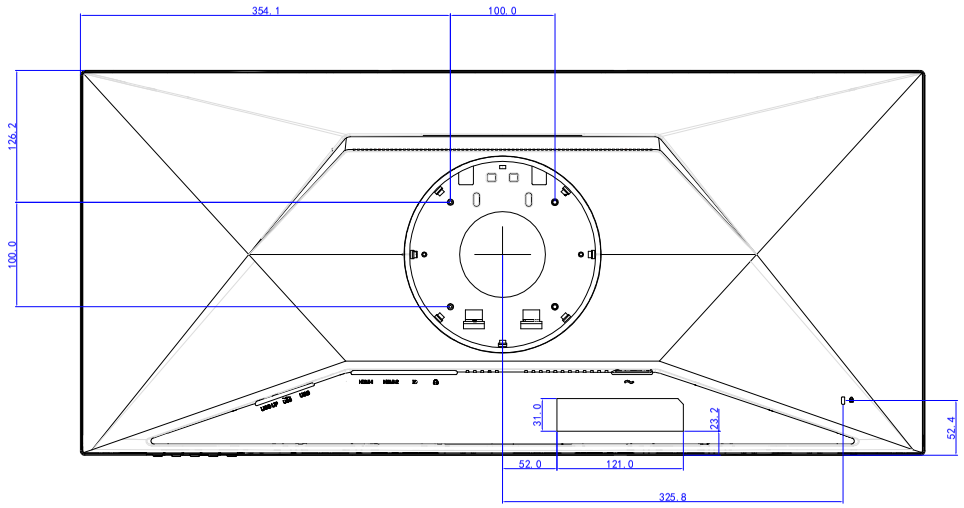

tilt -5°~ 23°

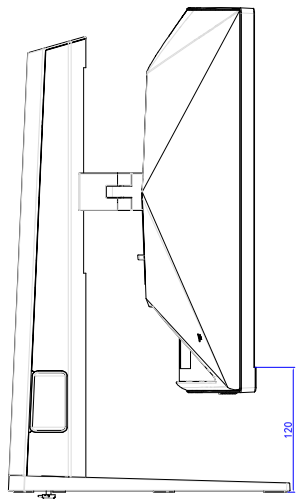

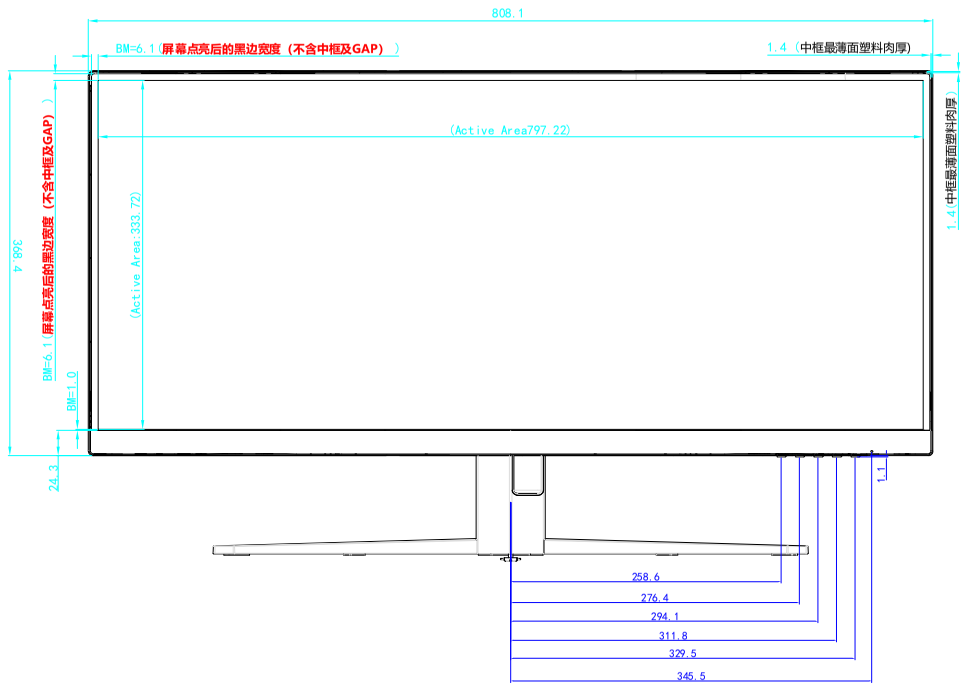

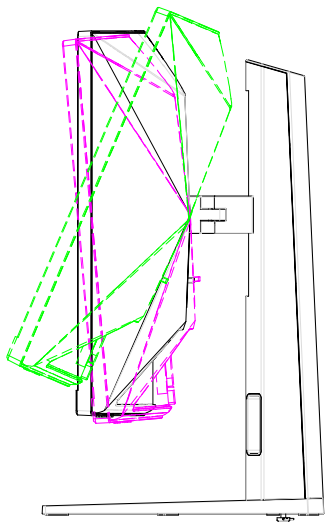

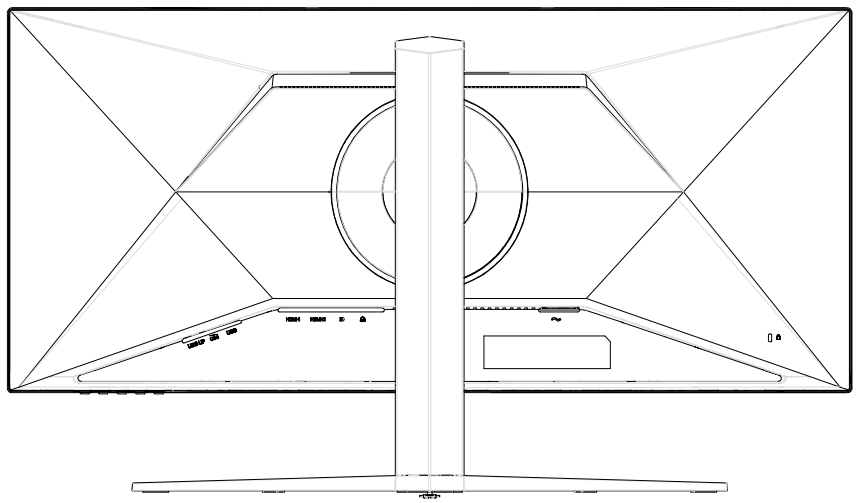

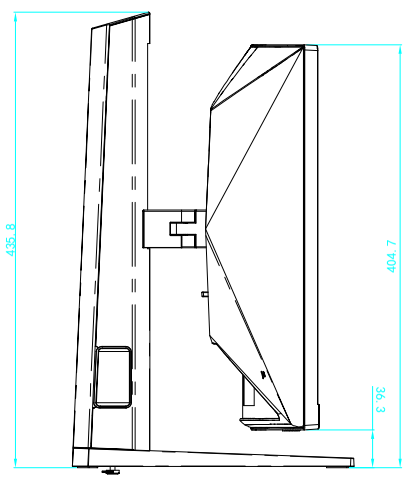

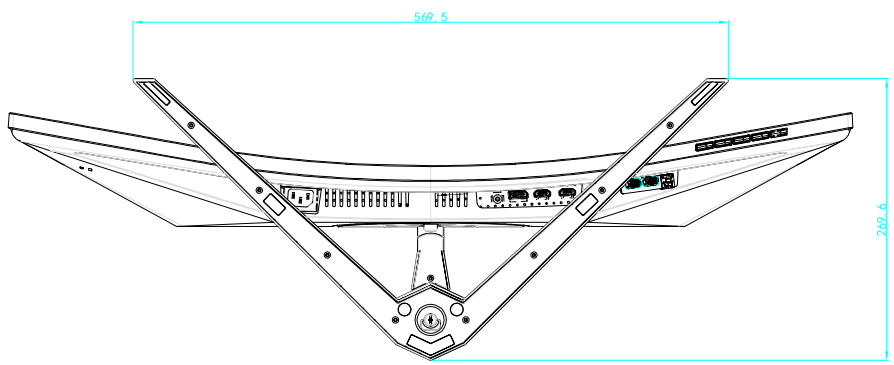

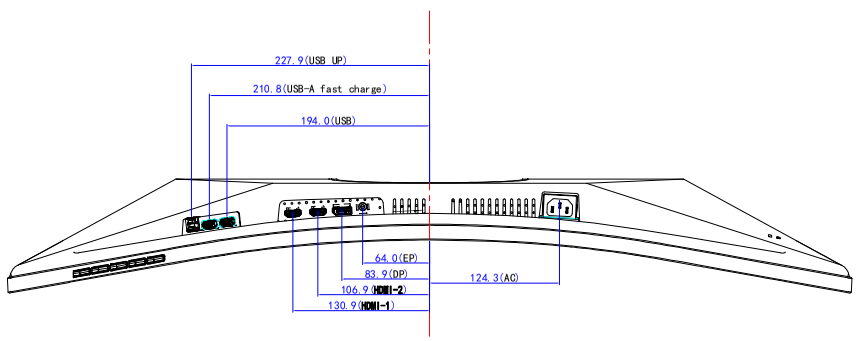

REVISION LIST

ITEM	ECN NO.	POSITION	DESCRIPTION WAS	DESCRIPTION IS	DATE	UPDATED BY	APPROVED BY

TOLERANCE UNLESS OTHERWISE SPECIFIED (mm)

RANGE OF DIM.	METAL & PLASTIC	POLYFOAM	CARTON
0~30	±0.10	+0/-2.0	+2.0/-0
30~60	±0.15		
60~120	±0.20		
120~300	±0.25		
300~600	±0.30		
600~1200	±0.40	+0/-3.0	
1200~UPON	±0.50	+0/-4.0	
ANGLE (SHEET METAL)	±0.5°		
Internal Diameter of Plastic Screw Boss	+0/-0		

MODEL:		PROE 3D:	PROE 2D:
UNIT mm	TOLERANCES UNLESS OTHERWISE STATED DIMENTIONS ANGLE	MATERIAL	
SCALE 1:1	3rd PROJ.	TREATMENT	
0000_CU34G4Z_ALL_240627		sheet191_cu34g4z_.drw	
DRAWN	DATE Sep-13-24	TPY Technology Ltd.	110 -1 A0
CHECK	DATE		TP MNT

COMPLY WITH RoHS