mm [inch]

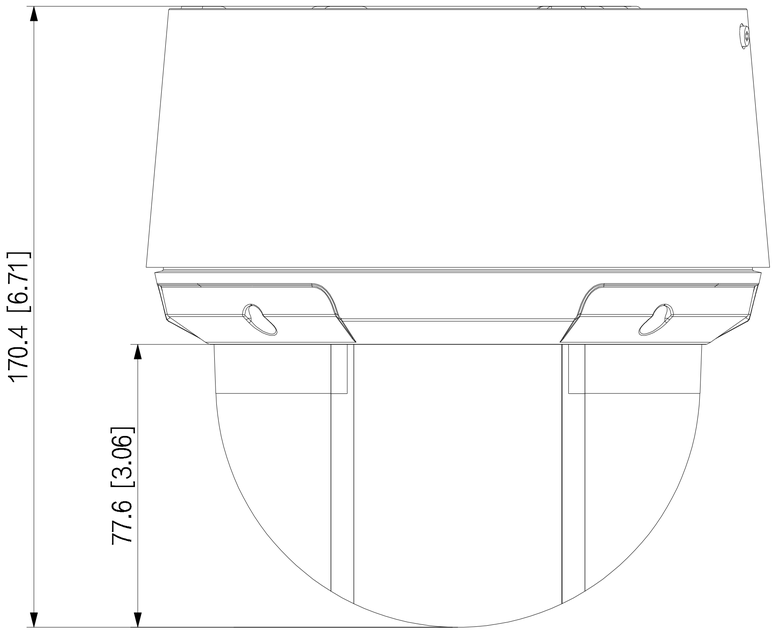
170.4 [6.71]
77.6 [3.06]

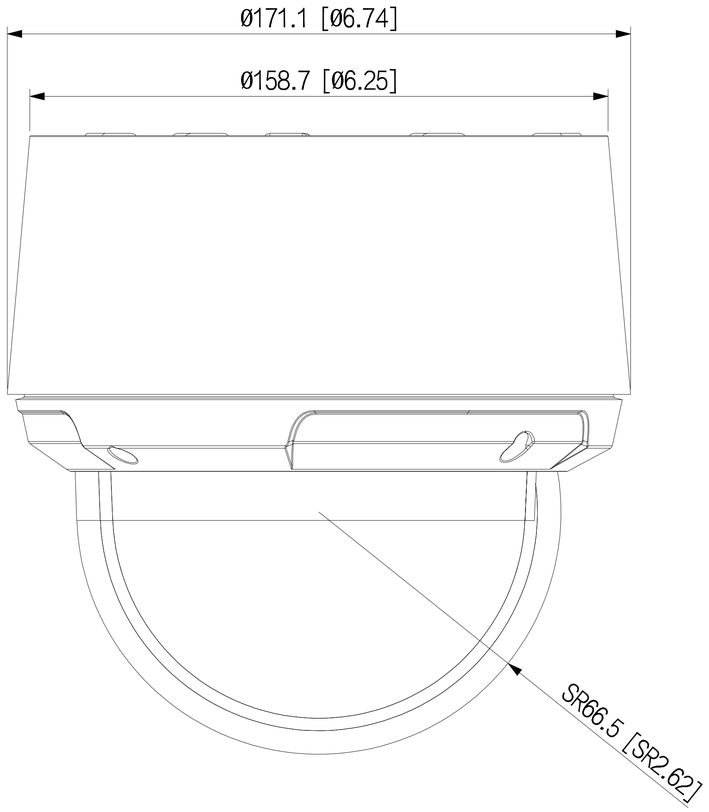
Ø171.1 [Ø6.74]
Ø158.7 [Ø6.25]
SR66.5 [SR2.62]

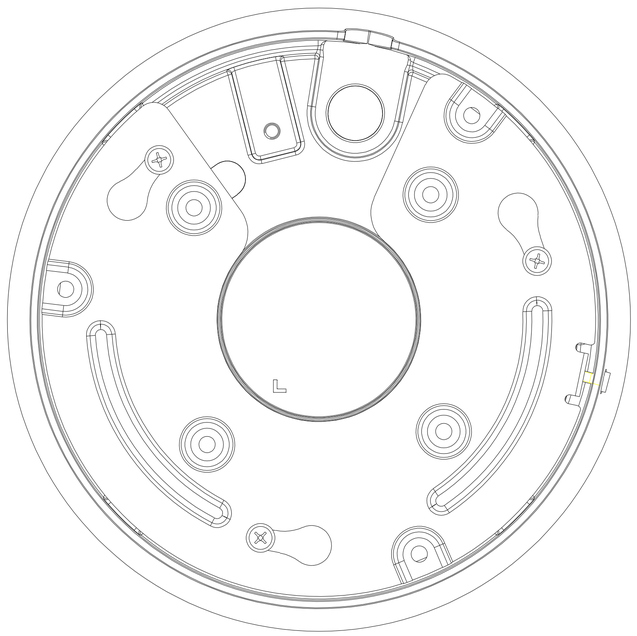

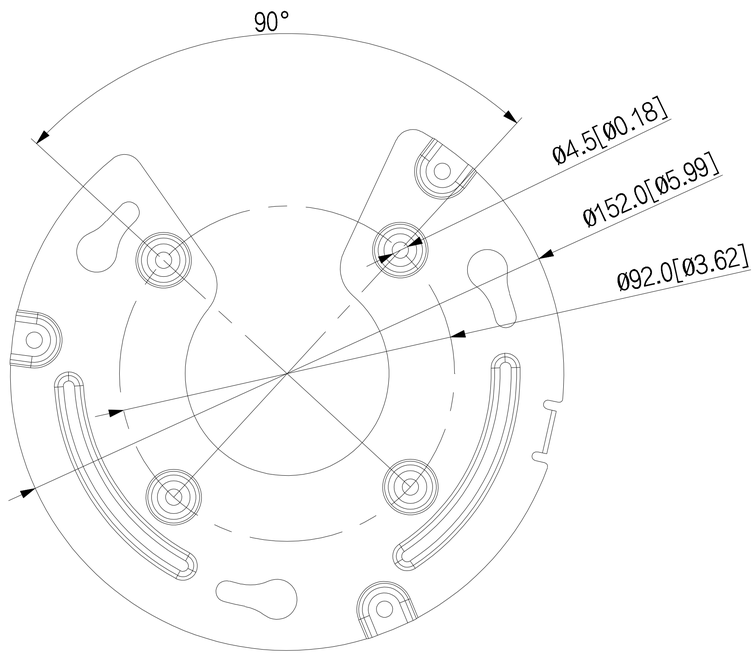
90°
Ø4.5[Ø0.18]
Ø152.0[Ø5.99]
Ø92.0[Ø3.62]