mm [inch]

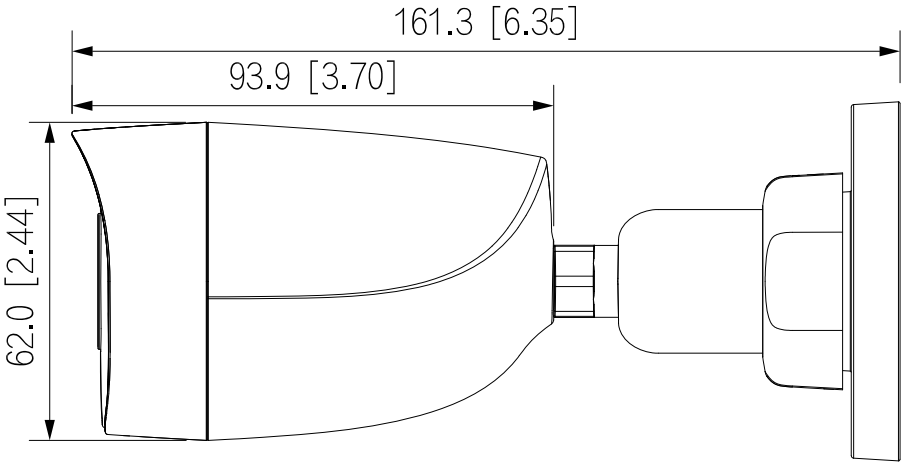
161.3 [6.35]
93.9 [3.70]
62.0 [2.44]

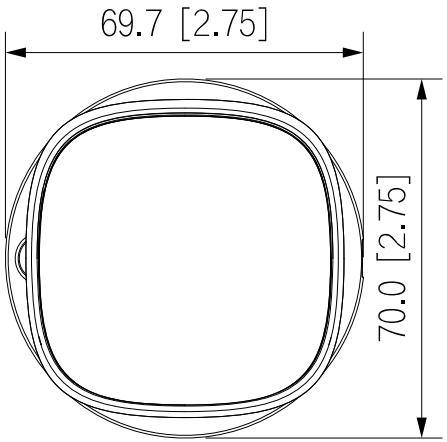
69.7 [2.75]
70.0 [2.75]

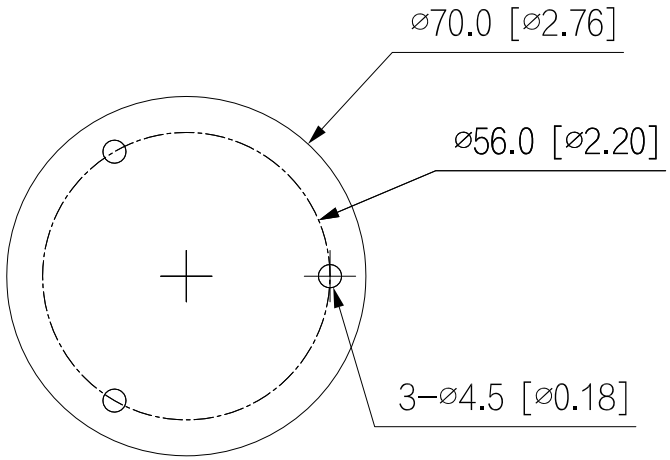
ø70.0 [ø2.76]
ø56.0 [ø2.20]
3-ø4.5 [ø0.18]