mm [inch]

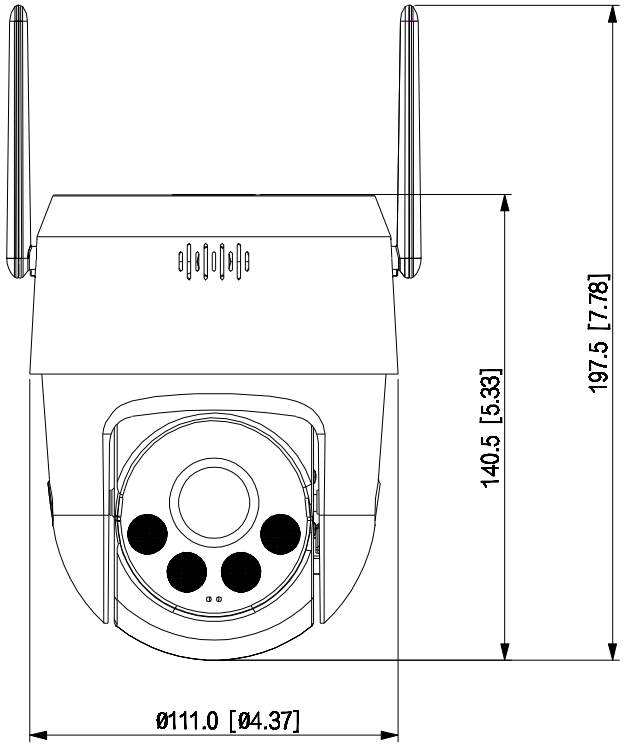
197.5 [7.78]
140.5 [5.33]
Ø111.0 [Ø4.37]

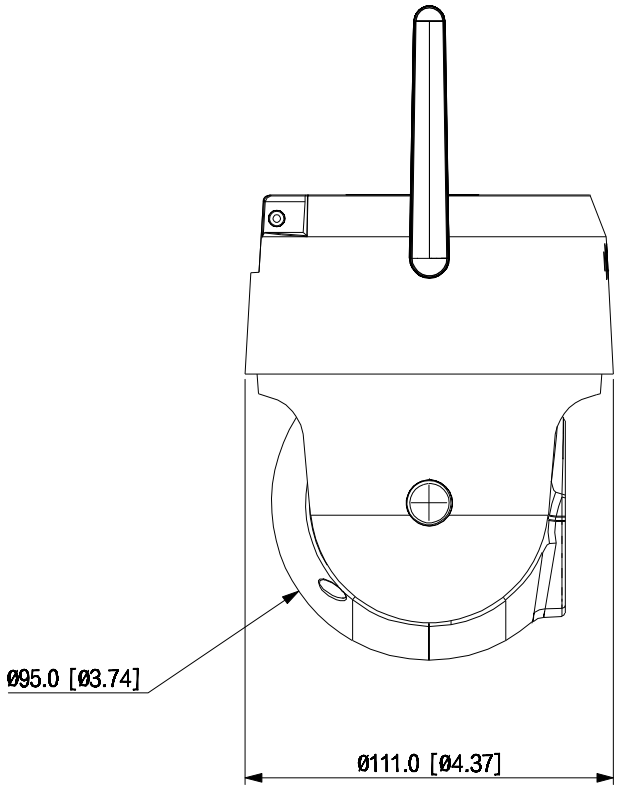
Ø95.0 [Ø3.74]
Ø111.0 [Ø4.37]

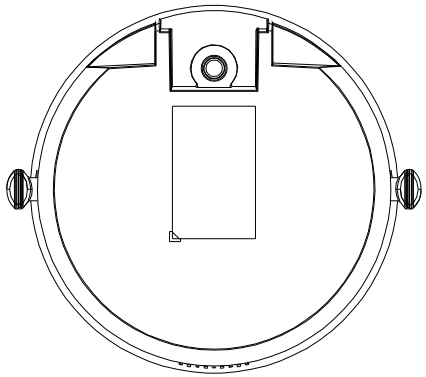

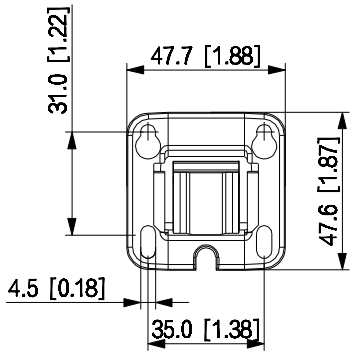
31.0 [1.22]
47.7 [1.88]
47.6 [1.87]
4.5 [0.18]
35.0 [1.38]

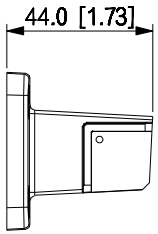
44.0 [1.73]