thermaltake

ASTRIA 600

Scan Here
Installation Guide

Parts List

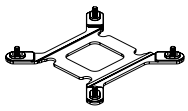

Ⓐ x 1

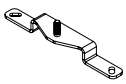

Ⓑ x 2



Ⓒ x 4



Ⓓ x 4



Ⓔ x 4



Ⓕ x 2

Ⓖ x 4



Ⓗ x 1

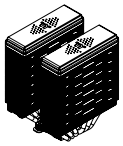

Ⓘ x 1



Ⓙ x 2

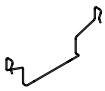

Ⓚ x 4

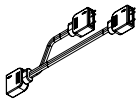

Ⓛ x 1

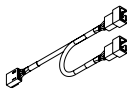

Ⓜ x 1

Intel Installation Guide

❶

ⓐ LGA1200/1156/1155/ 1151/1150
ⓑ LGA1954/1851/1700

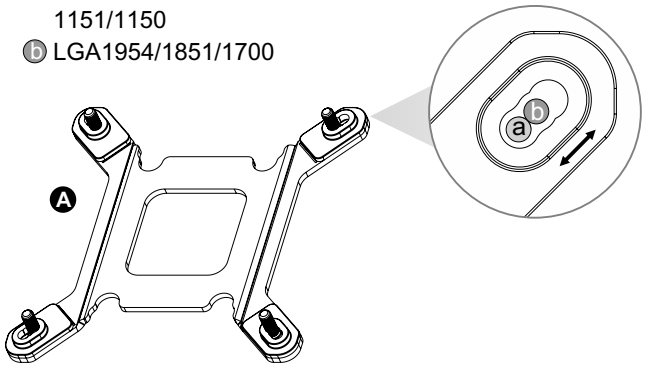

ⓐ LGA1200/1156/1155/ 1151/1150
ⓑ LGA1954/1851/1700

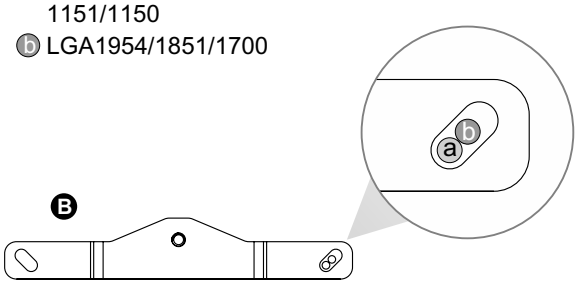

❷

LGA1954/1851/1700 or LGA1200/115X or LGA2066/2011

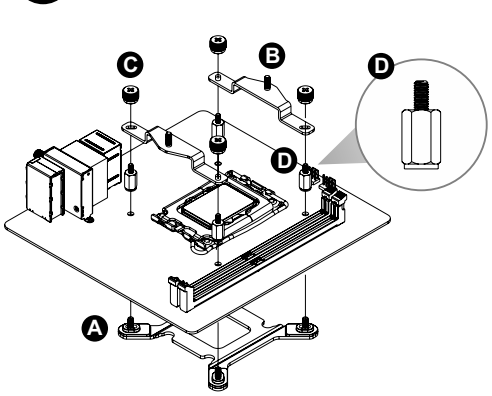

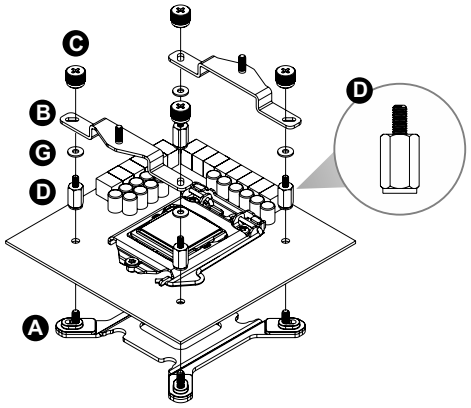

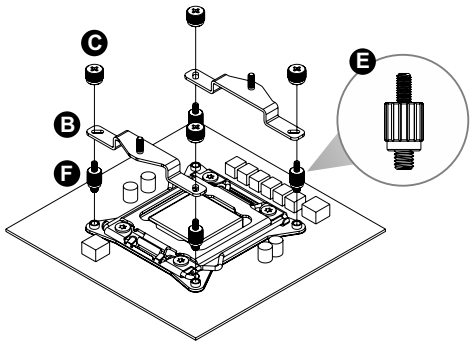

❸

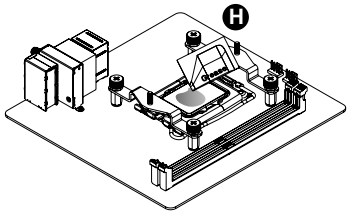

❹

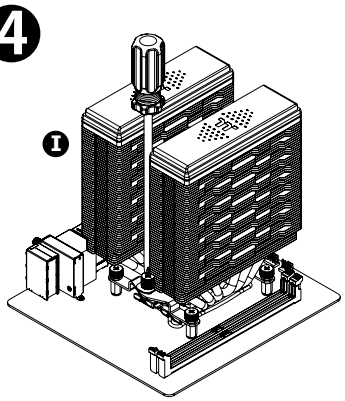

❺

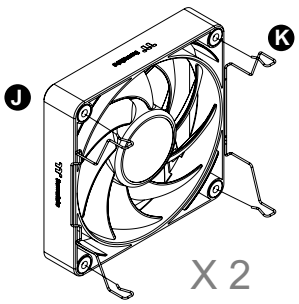

❻

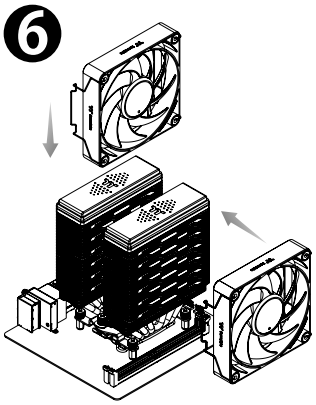

AMD Installation Guide

1

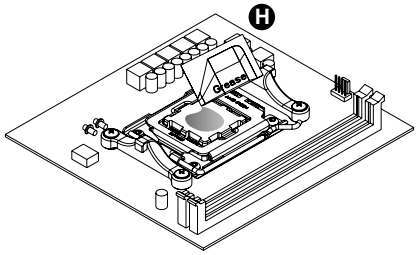

2

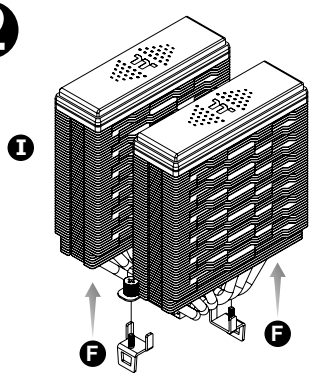

3

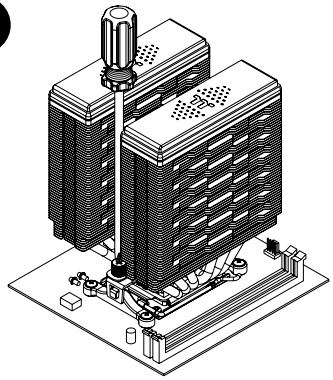

4

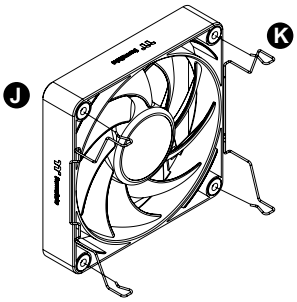

X 2

5

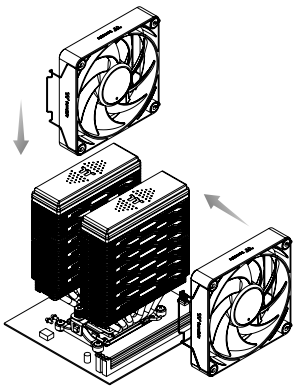

Fan & MB SYNC Installation Guide

⚠CAUTION Please power off the PC and check the Positive and Negative ends on the connector before connecting the cable to mainboard. Connecting the wrong end can damage the fans.

1

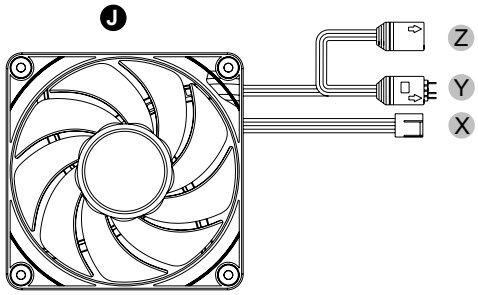

2

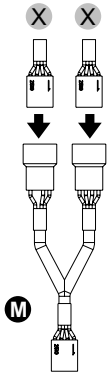

3

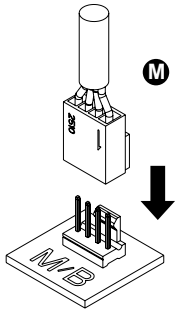

4

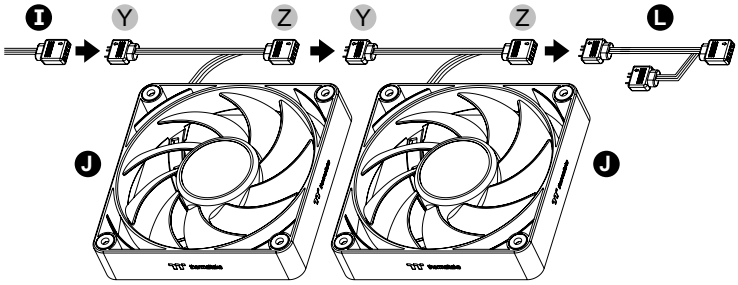

5

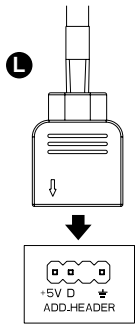

thermaltake
© 2026 Thermaltake Technology Co., Ltd. All Rights Reserved.
www.thermaltake.com
RoHS COMPLIANT CE